MFOS Synth-DIY Experimenter Board

Designed by Ray Wilson August, 2010

Kludge Area Used For Mixers

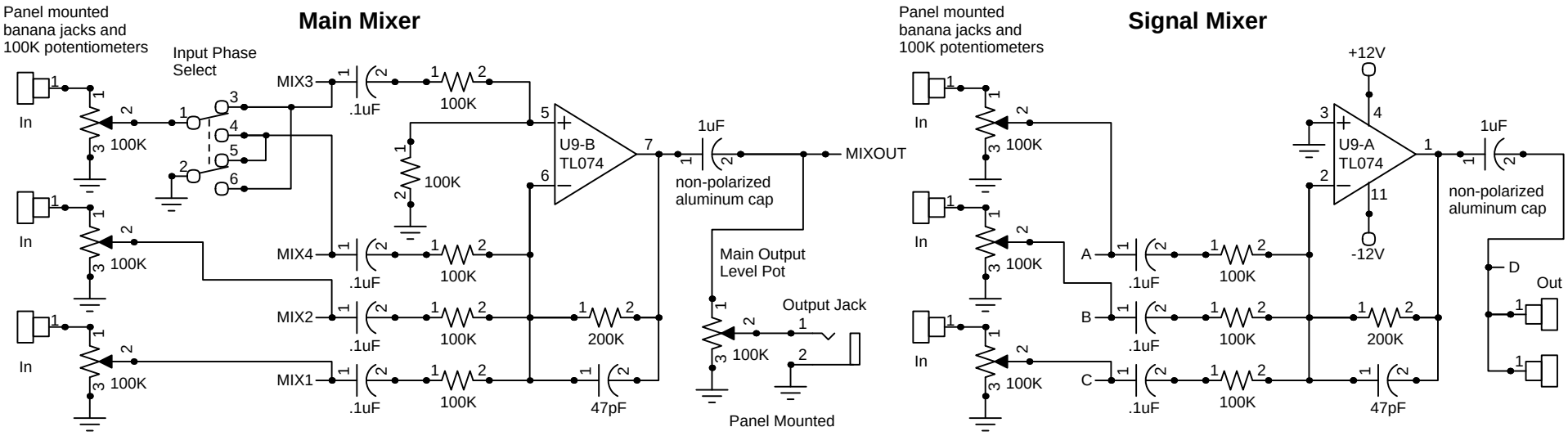

Page 7

Copyright Music From Outer Space LLC 2010