Noise Cornucopia REV 01
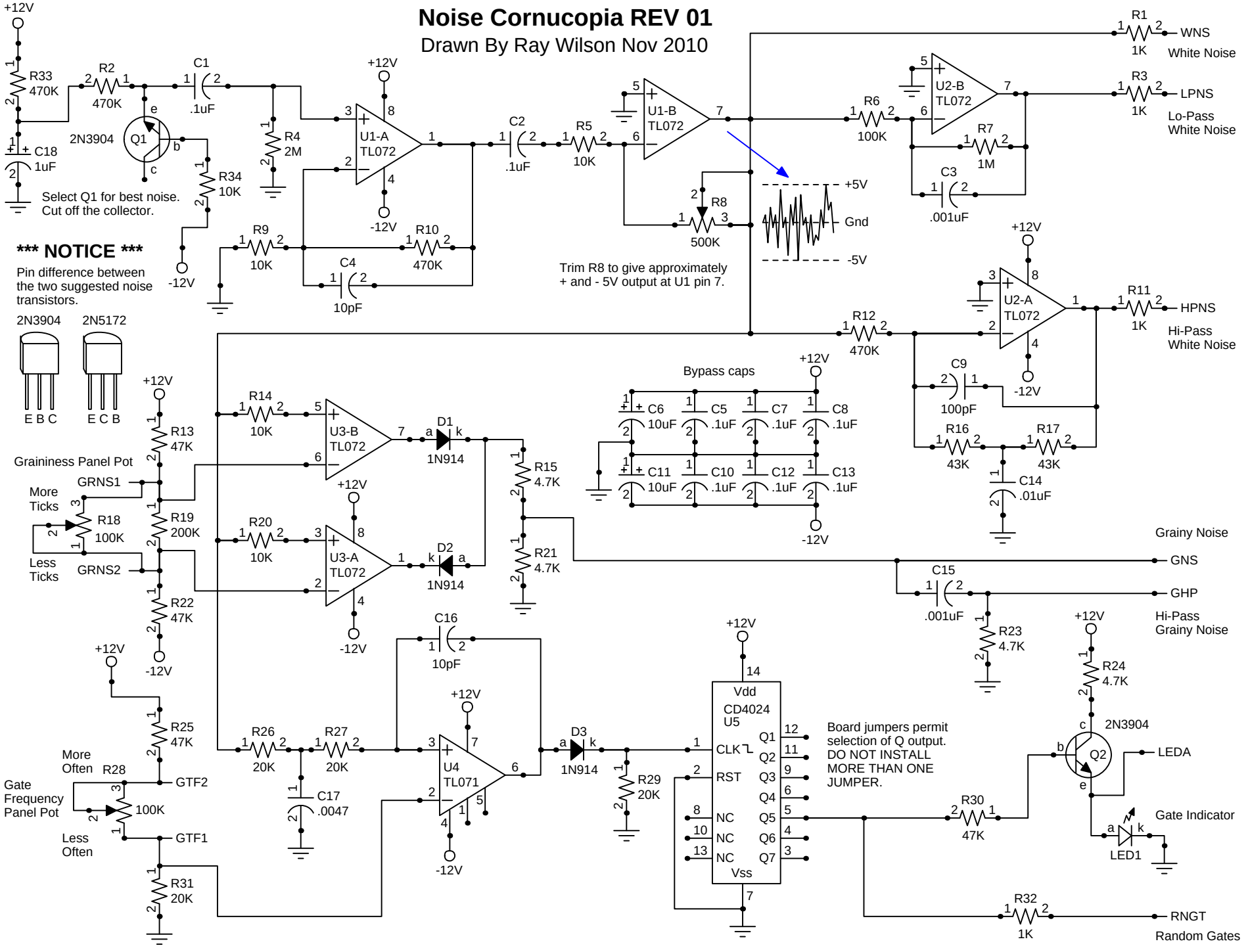
Drawn By Ray Wilson Nov 2010