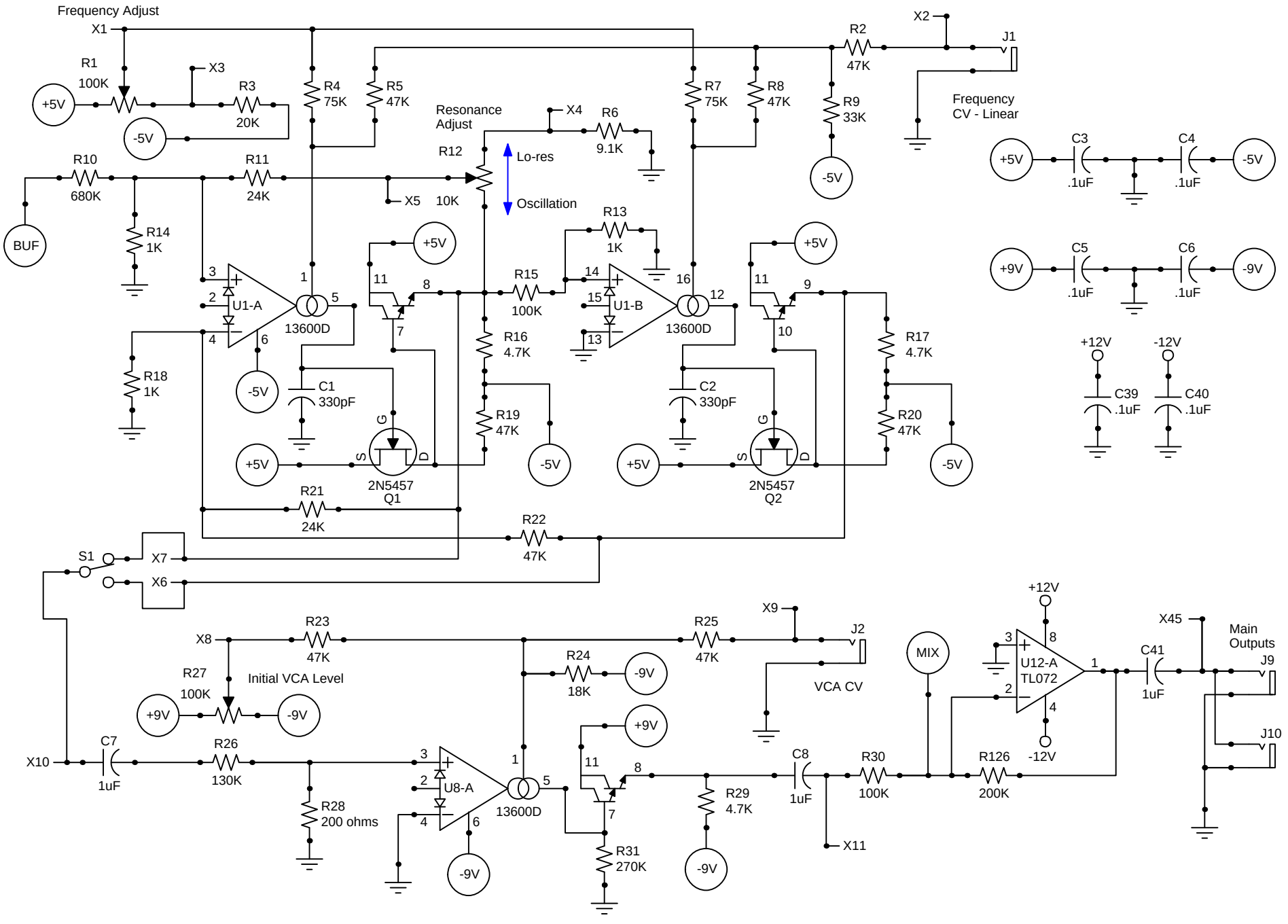
Frequency Adjust
X1
R1
100K
+5V
-5V
X3
R3
20K
R4
75K
R5
47K
Resonance
Adjust
R12
X4
R6
9.1K
Lo-res
Oscillation
X5
10K
R7
75K
R8
47K
R9
33K
R2
47K
X2
J1
Frequency
CV - Linear
R10
680K
R11
24K
BUF
R14
1K
U1-A
13600D
R18
1K
C1
330pF
R15
100K
R16
4.7K
R19
47K
R13
1K
U1-B
13600D
C2
330pF
R17
4.7K
R20
47K
2N5457
Q1
2N5457
Q2
R21
24K
R22
47K
S1
X7
X6
C3
.1uF
C4
.1uF
+9V
-9V
C5
.1uF
C6
.1uF
+12V
-12V
C39
.1uF
C40
.1uF
X8
R23
47K
R27
100K
Initial VCA Level
R24
18K
R25
47K
X9
J2
VCA CV
MIX
U12-A
TL072
C41
1uF
X45
Main
Outputs
J9
J10
X10
C7
1uF
R26
130K
R28
200 ohms
U8-A
13600D
R31
270K
R29
4.7K
C8
1uF
R30
100K
X11
R126
200K