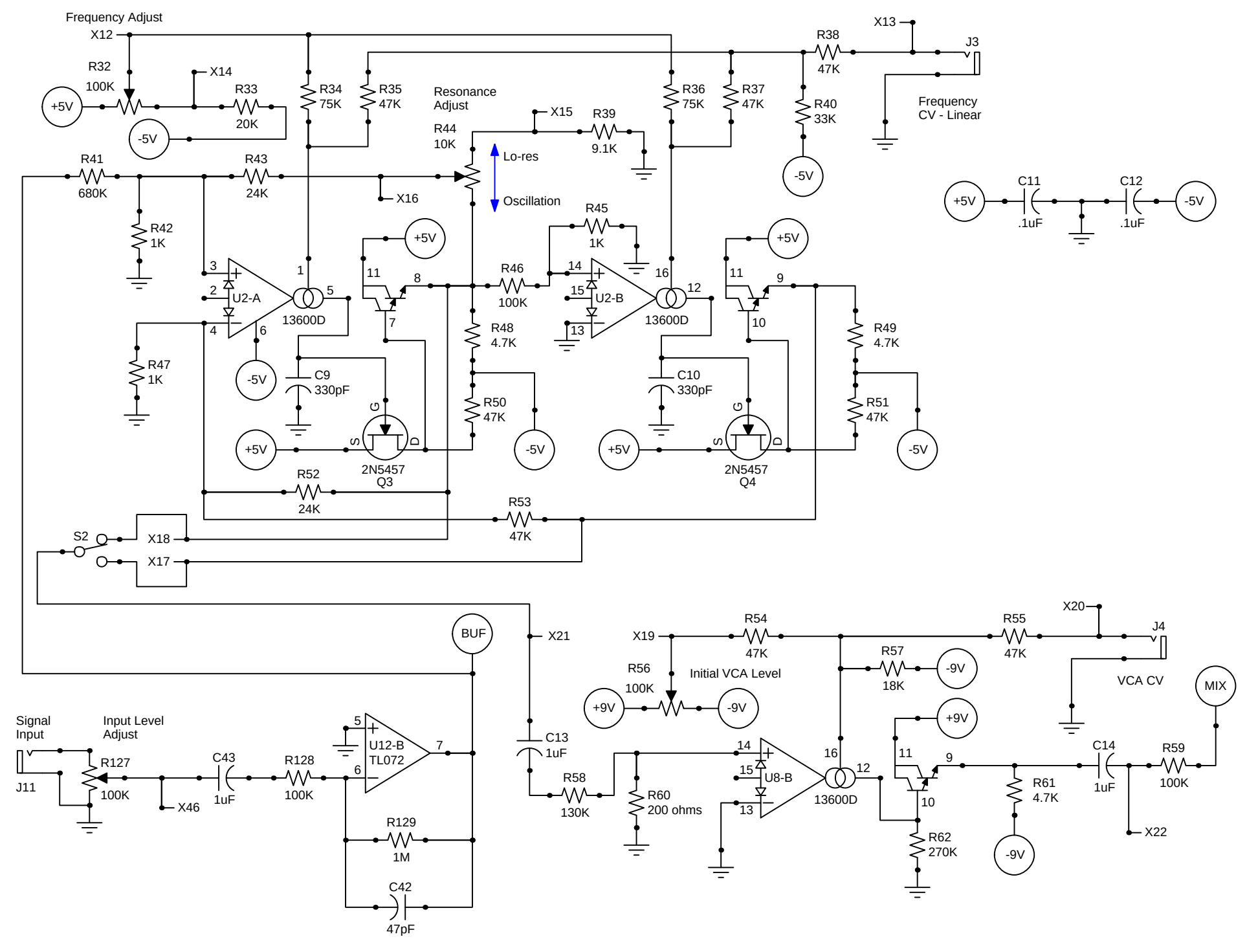
Frequency Adjust
X12
R32
100K
+5V
X14
R33
20K
-5V
R34
75K
R35
47K
Resonance
Adjust
R44
10K
X15
R39
9.1K
Lo-res
Oscillation
R36
75K
R37
47K
R38
47K
X13
J3
R40
33K
-5V
Frequency
CV - Linear
R41
680K
R43
24K
X16
R42
1K
R45
1K
+5V
C11
.1uF
C12
.1uF
-5V
3
2
U2-A
4
6
1
5
13600D
11
8
7
R46
100K
14
15
U2-B
13
16
12
13600D
11
9
10
R47
1K
-5V
C9
330pF
R48
4.7K
R50
47K
C10
330pF
R49
4.7K
R51
47K
G
S
D
+5V
2N5457
Q3
-5V
+5V
2N5457
Q4
-5V
R52
24K
R53
47K
S2
X18
X17
BUF
X21
X19
R54
47K
R55
47K
X20
J4
R57
18K
-9V
R56
100K
Initial VCA Level
+9V
-9V
VCA CV
MIX
+9V
Signal
Input
J11
Input Level
Adjust
R127
100K
X46
C43
1uF
R128
100K
5
6
U12-B
TL072
7
R129
1M
C42
47pF
C13
1uF
R58
130K
R60
200 ohms
14
15
U8-B
13
16
13600D
12
11
9
10
R62
270K
R61
4.7K
-9V
C14
1uF
R59
100K
X22