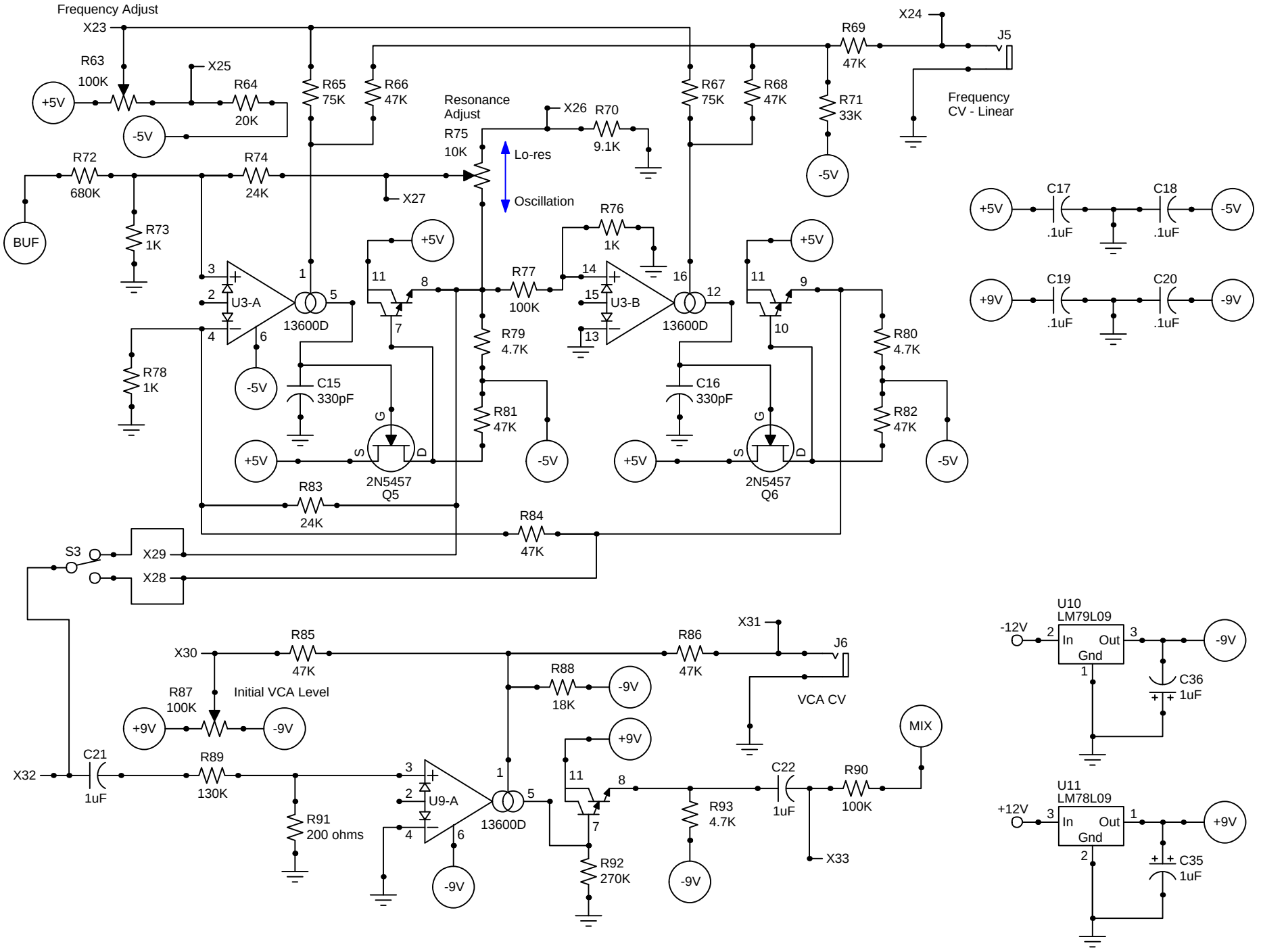
Frequency Adjust
X23
R63
100K
+5V
-5V
X25
R64
20K
R65
75K
R66
47K
Resonance
Adjust
R75
10K
X26
R70
9.1K
Lo-res
Oscillation
R67
75K
R68
47K
R69
47K
X24
J5
R71
33K
Frequency
CV - Linear
R72
680K
R74
24K
X27
BUF
R73
1K
U3-A
13600D
R78
1K
C15
330pF
R76
1K
R77
100K
U3-B
13600D
R79
4.7K
R81
47K
C16
330pF
R80
4.7K
R82
47K
2N5457
Q5
2N5457
Q6
R83
24K
R84
47K
S3
X29
X28
C17
.1uF
C18
.1uF
C19
.1uF
C20
.1uF
+9V
-9V
X30
R85
47K
R86
47K
X31
J6
VCA CV
R87
100K
Initial VCA Level
R88
18K
X32
C21
1uF
R89
130K
R91
200 ohms
U9-A
13600D
R92
270K
R93
4.7K
C22
1uF
R90
100K
MIX
X33
U10
LM79L09
-12V
In
Out
Gnd
C36
1uF
U11
LM78L09
+12V
C35
1uF