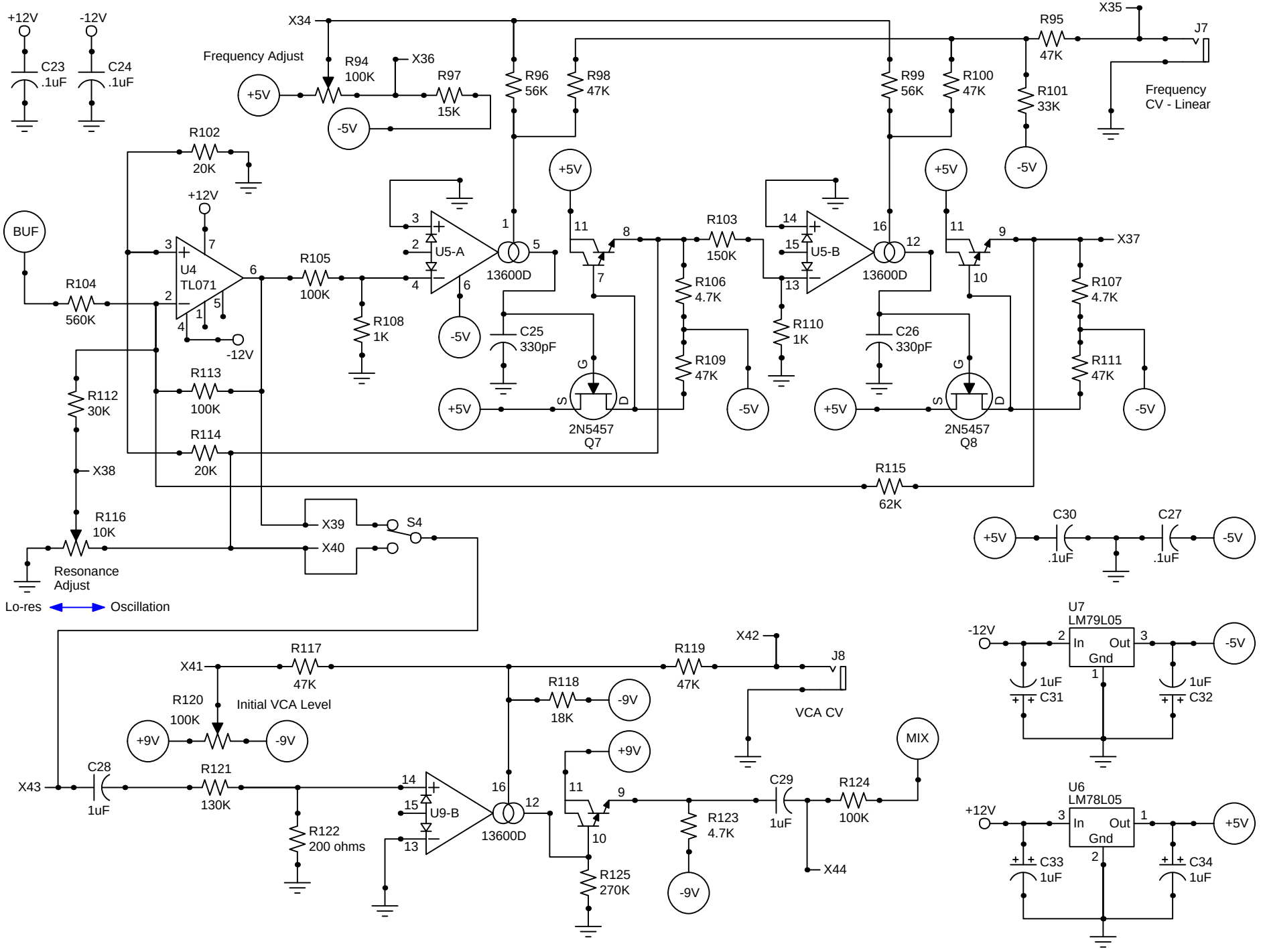
+12V
-12V
C23
.1uF
C24
.1uF
X34
Frequency Adjust
R94
100K
X36
R97
15K
+5V
-5V
R96
56K
R98
47K
R99
56K
R100
47K
R95
47K
X35
J7
R101
33K
Frequency
CV - Linear
R102
20K
+12V
BUF
U4
TL071
R104
560K
R105
100K
R108
1K
-12V
U5-A
13600D
C25
330pF
2N5457
Q7
R103
150K
R106
4.7K
R109
47K
U5-B
13600D
R110
1K
C26
330pF
2N5457
Q8
X37
R107
4.7K
R111
47K
R113
100K
R114
20K
R112
30K
X38
R115
62K
R116
10K
Resonance
Adjust
X39
X40
S4
Lo-res
Oscillation
C30
.1uF
C27
.1uF
U7
LM79L05
In
Out
Gnd
1uF
C31
1uF
C32
X41
R117
47K
R119
47K
X42
J8
VCA CV
R118
18K
-9V
R120
100K
Initial VCA Level
+9V
MIX
X43
C28
1uF
R121
130K
R122
200 ohms
U9-B
13600D
R123
4.7K
C29
1uF
R124
100K
X44
R125
270K
U6
LM78L05
C33
1uF
C34
1uF