MFOS 16 Step Analog Sequencer
Auxilliary LED/Gate PCB
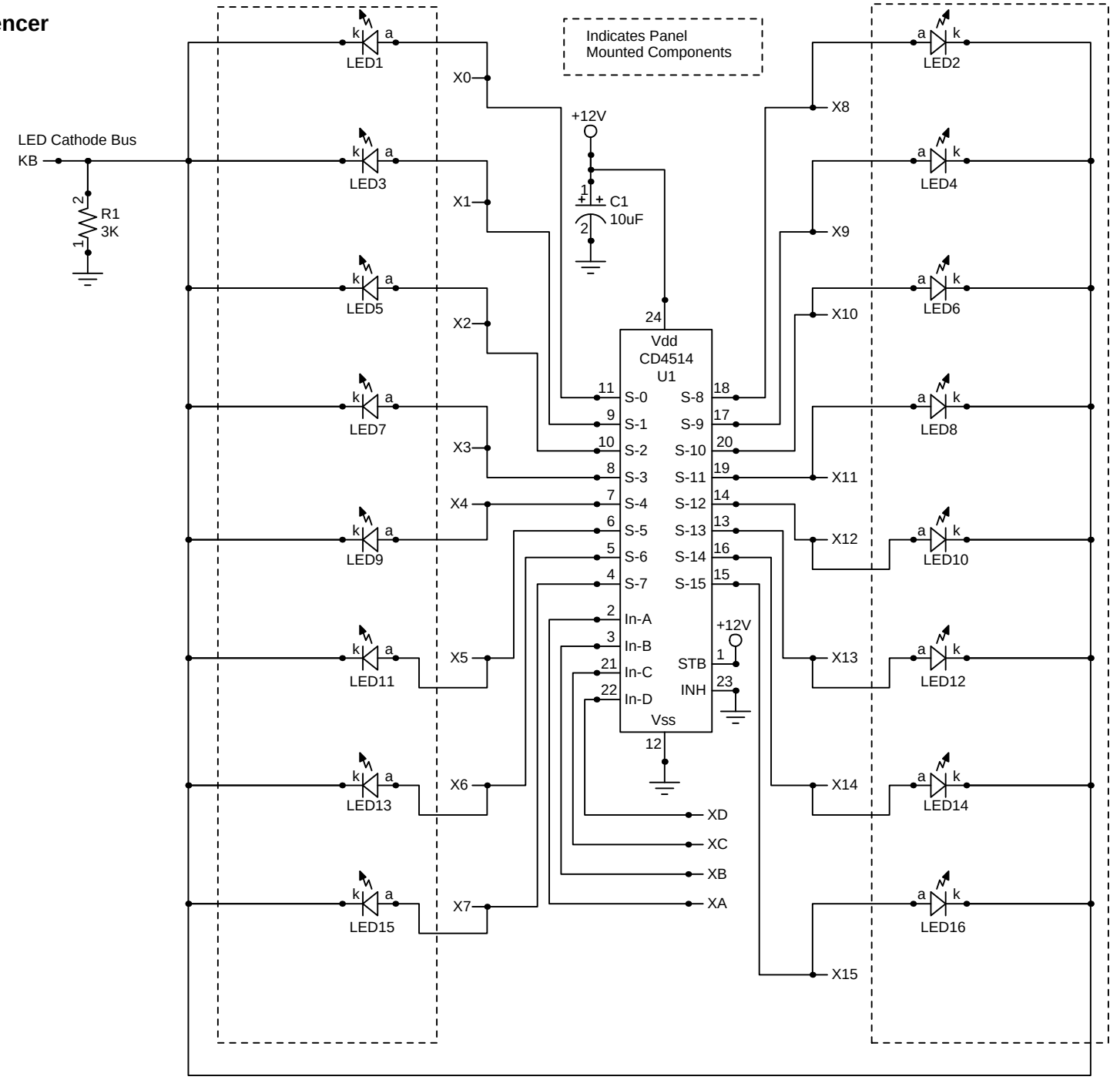
Copyright Music From Outer Space 2012