LED Driver ONLY Wiring View (Rear of Panel)

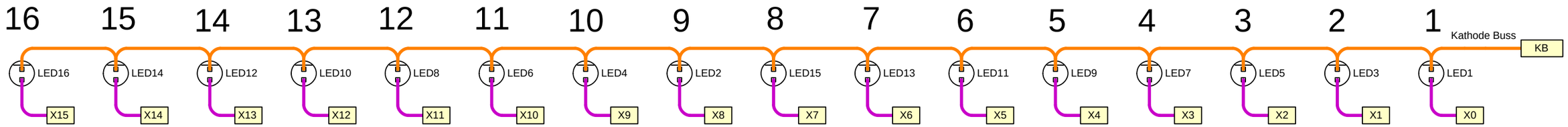

LED Driver ONLY Panel Template (Illustrative)

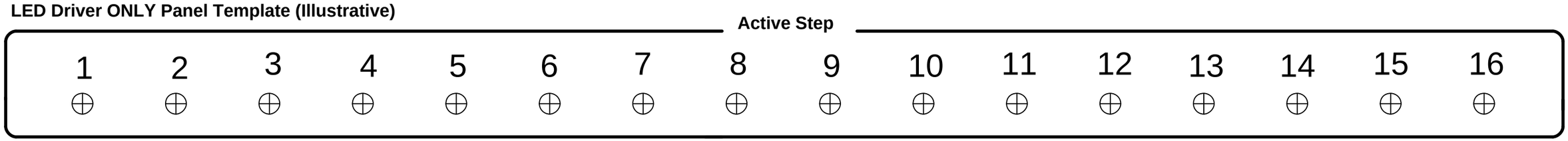

LED Driver And Additional Set of Gate Switches Wiring View (Rear of Panel)

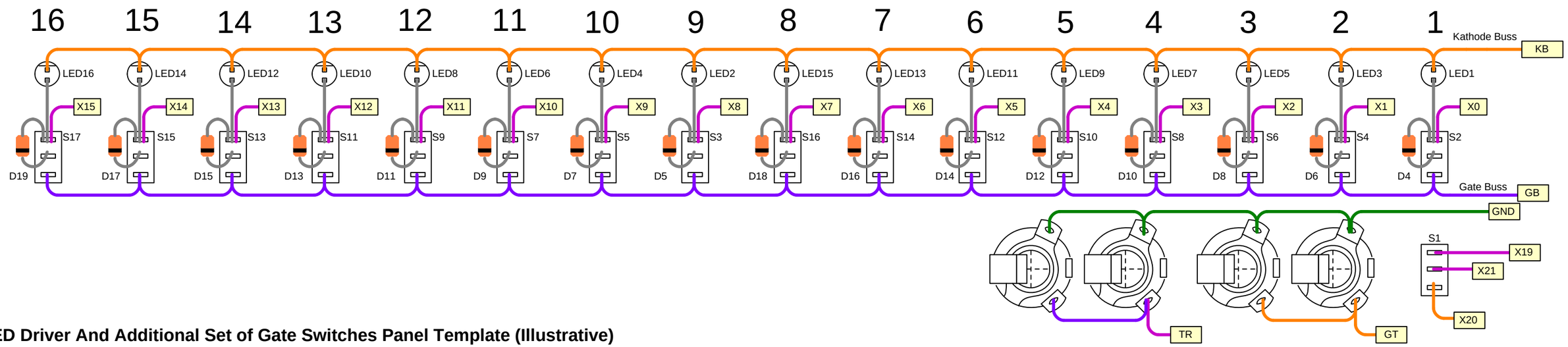
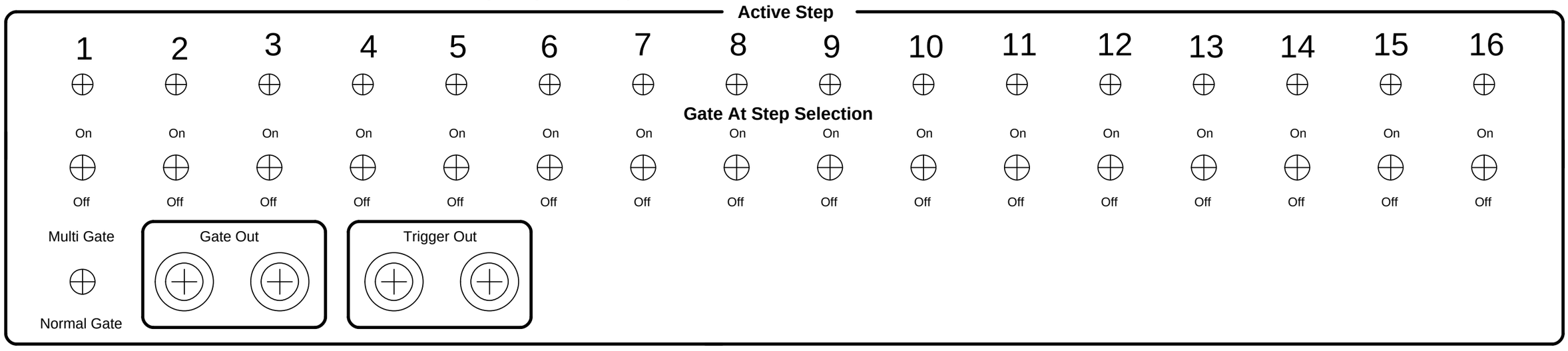
LED Driver And Additional Set of Gate Switches Panel Template (Illustrative)