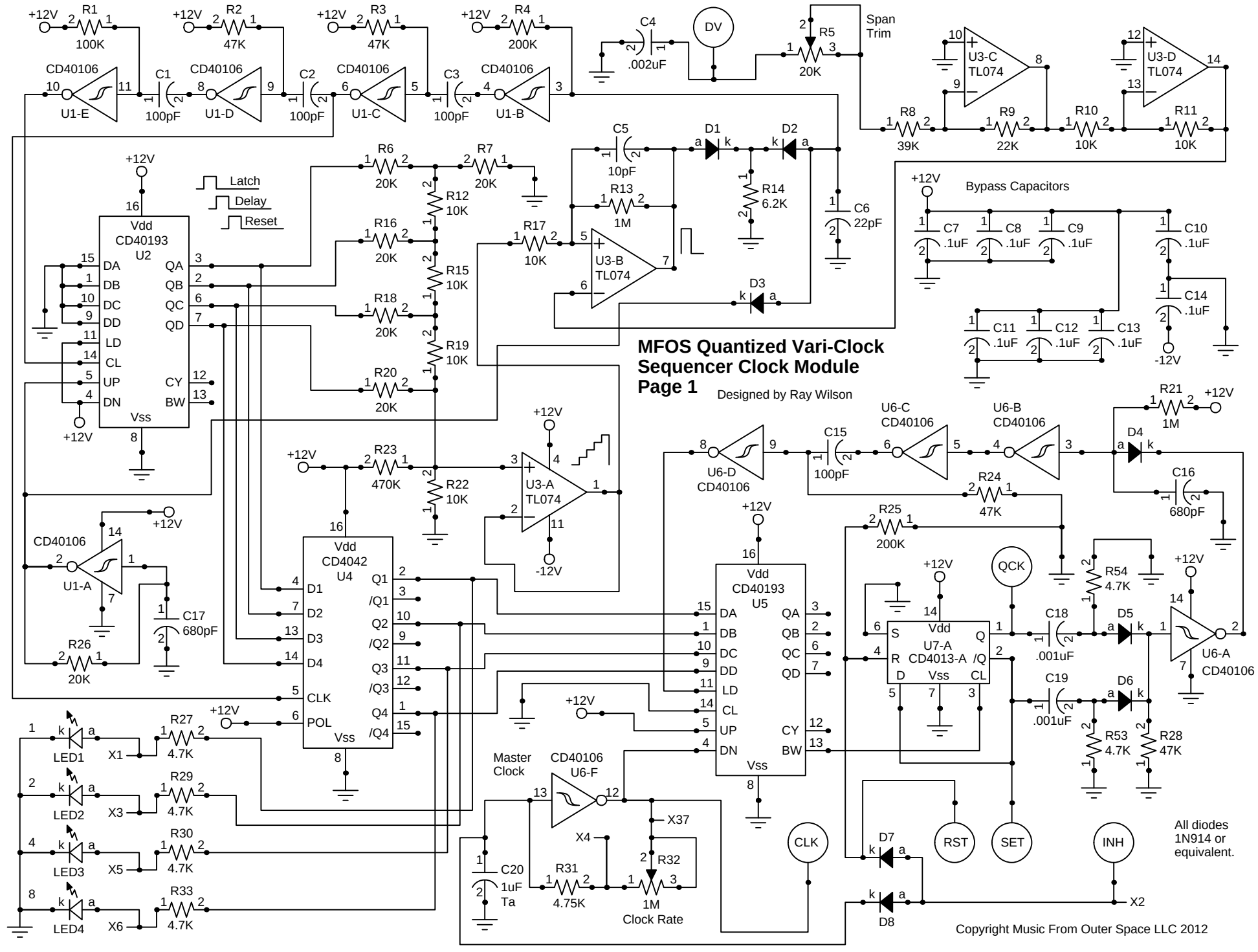
MFOS Quantized Vari-Clock Sequencer Clock Module
Page 1
Designed by Ray Wilson
Span Trim
Bypass Capacitors
Latch
Delay
Reset
Master Clock
Clock Rate
All diodes 1N914 or equivalent.
Copyright Music From Outer Space LLC 2012