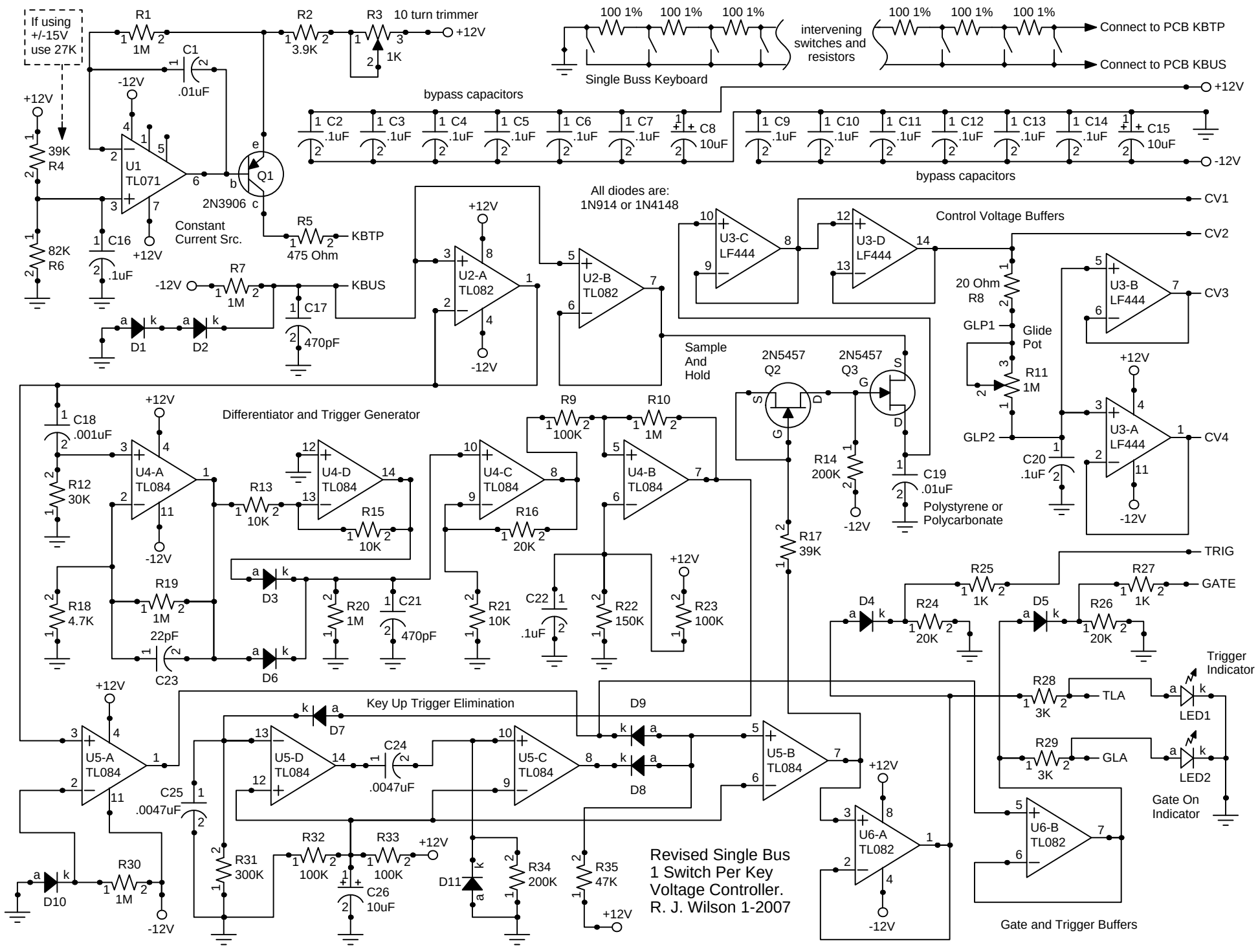
If using +/-15V use 27K
R1 1M
R2 3.9K
R3 10 turn trimmer 1K
+12V
C1 .01uF
-12V
U1 TL071
Q1 2N3906
39K R4
82K R6
C16 .1uF
Constant Current Src.
R5 475 Ohm
KBTP
R7 1M
KBUS
C17 470pF
D1
D2
100 1%
intervening switches and resistors
Connect to PCB KBTP
Connect to PCB KBUS
Single Buss Keyboard
bypass capacitors
C2 .1uF
C3 .1uF
C4 .1uF
C5 .1uF
C6 .1uF
C7 .1uF
C8 10uF
C9 .1uF
C10 .1uF
C11 .1uF
C12 .1uF
C13 .1uF
C14 .1uF
C15 10uF
All diodes are: 1N914 or 1N4148
U2-A TL082
U2-B TL082
U3-C LF444
U3-D LF444
Control Voltage Buffers
CV1
CV2
CV3
CV4
20 Ohm R8
GLP1
Glide Pot
R11 1M
GLP2
U3-B LF444
U3-A LF444
C20 .1uF
Sample And Hold
2N5457 Q2
2N5457 Q3
R14 200K
C19 .01uF
Polystyrene or Polycarbonate
R17 39K
Differentiator and Trigger Generator
C18 .001uF
R12 30K
U4-A TL084
R13 10K
U4-D TL084
R15 10K
R18 4.7K
R19 1M
22pF C23
D3
D6
R20 1M
C21 470pF
U4-C TL084
R16 20K
R21 10K
R9 100K
R10 1M
U4-B TL084
C22 .1uF
R22 150K
R23 100K
TRIG
GATE
R25 1K
R27 1K
D4
D5
R24 20K
R26 20K
Trigger Indicator
R28 3K
TLA
LED1
R29 3K
GLA
LED2
Gate On Indicator
Key Up Trigger Elimination
D7
D9
D8
U5-A TL084
U5-D TL084
U5-C TL084
U5-B TL084
C24 .0047uF
C25 .0047uF
R31 300K
R32 100K
R33 100K
C26 10uF
D10
R30 1M
D11
R34 200K
R35 47K
U6-A TL082
U6-B TL082
Gate and Trigger Buffers
Revised Single Bus
1 Switch Per Key
Voltage Controller.
R. J. Wilson 1-2007