MFOS Sound Lab MAXI Synth Sample And Hold

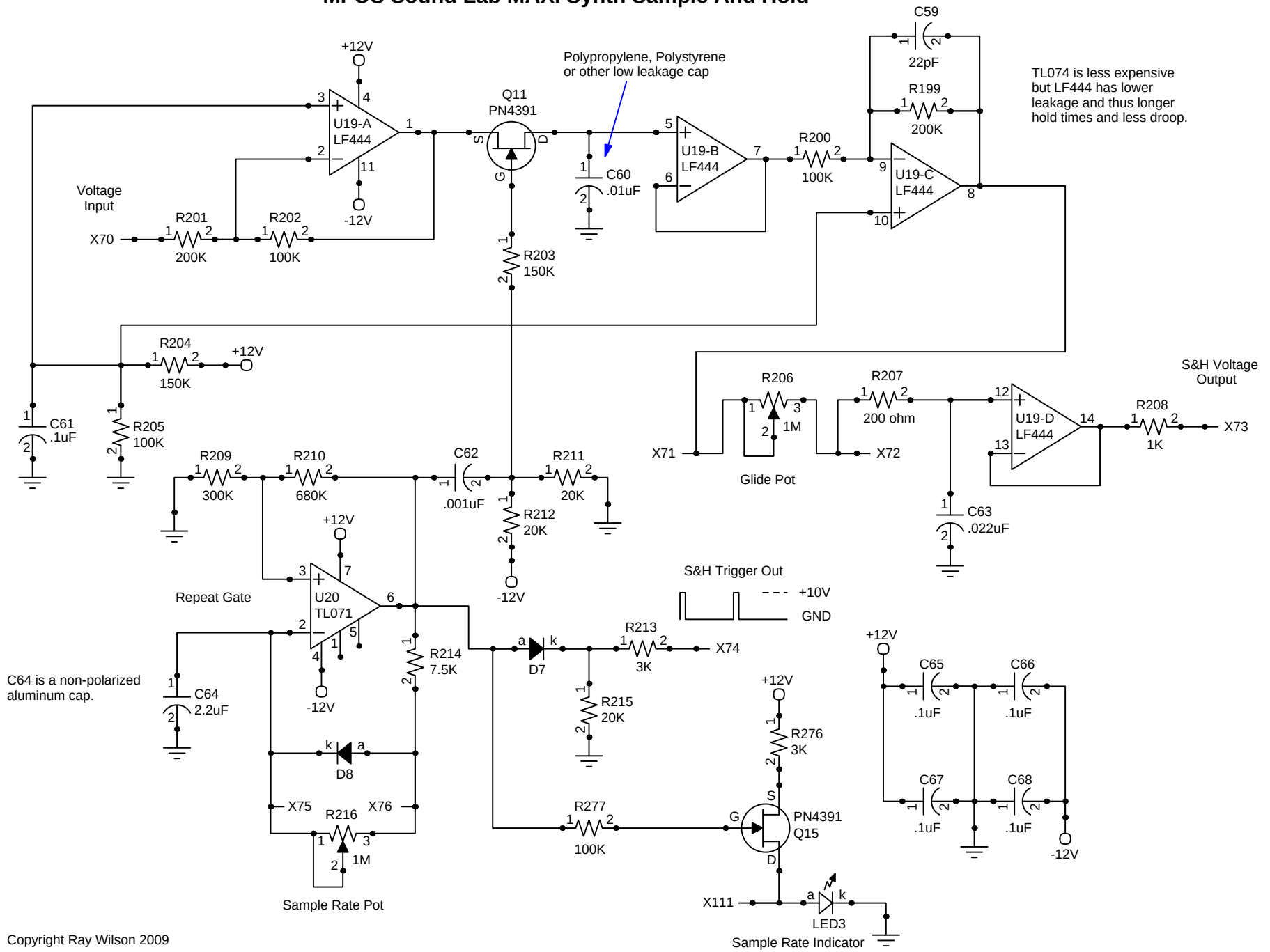

Copyright Ray Wilson 2009