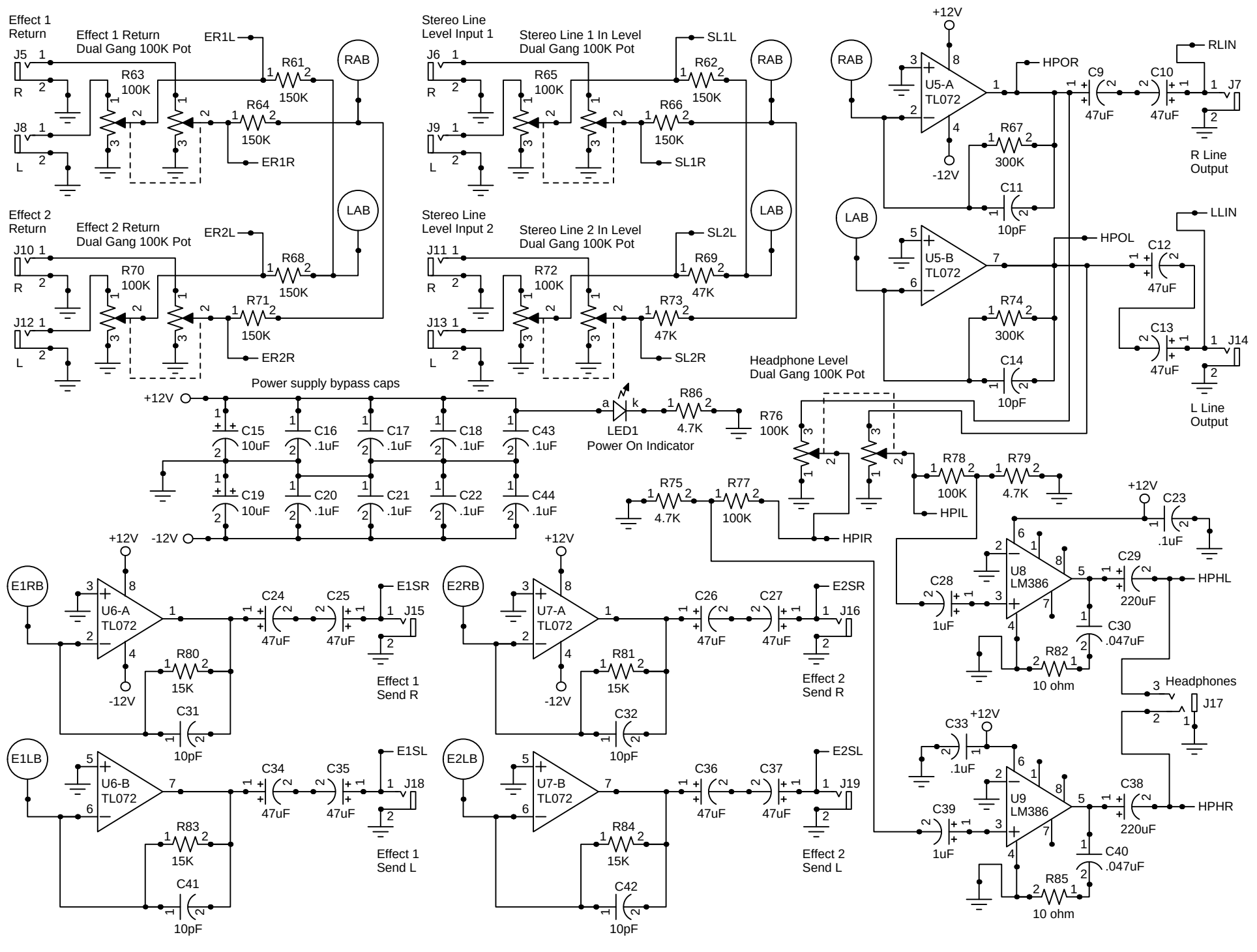
Effect 1 Return
Effect 1 Return Dual Gang 100K Pot
J5
J8
R63 100K
R64 150K
R61 150K
ER1L
ER1R
RAB
LAB
Effect 2 Return
Effect 2 Return Dual Gang 100K Pot
J10
J12
R70 100K
R71 150K
R68 150K
ER2L
ER2R
Stereo Line Level Input 1
Stereo Line 1 In Level Dual Gang 100K Pot
J6
J9
R65 100K
R66 150K
R62 150K
SL1L
SL1R
Stereo Line Level Input 2
Stereo Line 2 In Level Dual Gang 100K Pot
J11
J13
R72 100K
R73 47K
R69 47K
SL2L
SL2R
+12V
-12V
U5-A TL072
U5-B TL072
HPOR
HPOL
C9 47uF
C10 47uF
C12 47uF
C13 47uF
R67 300K
R74 300K
C11 10pF
C14 10pF
RLIN
LLIN
J7
J14
R Line Output
L Line Output
Headphone Level Dual Gang 100K Pot
R76 100K
R75 4.7K
R77 100K
R78 100K
R79 4.7K
HPIR
HPIL
Power supply bypass caps
C15 10uF
C16 .1uF
C17 .1uF
C18 .1uF
C43 .1uF
C19 10uF
C20 .1uF
C21 .1uF
C22 .1uF
C44 .1uF
LED1
Power On Indicator
R86 4.7K
E1RB
E1LB
U6-A TL072
U6-B TL072
C24 47uF
C25 47uF
C34 47uF
C35 47uF
R80 15K
R83 15K
C31 10pF
C41 10pF
E1SR
E1SL
J15
J18
Effect 1 Send R
Effect 1 Send L
E2RB
E2LB
U7-A TL072
U7-B TL072
C26 47uF
C27 47uF
C36 47uF
C37 47uF
R81 15K
R84 15K
C32 10pF
C42 10pF
E2SR
E2SL
J16
J19
Effect 2 Send R
Effect 2 Send L
U8 LM386
U9 LM386
C23 .1uF
C28 1uF
C29 220uF
C30 .047uF
R82 10 ohm
C33 .1uF
C39 1uF
C38 220uF
C40 .047uF
R85 10 ohm
HPHL
HPHR
Headphones
J17