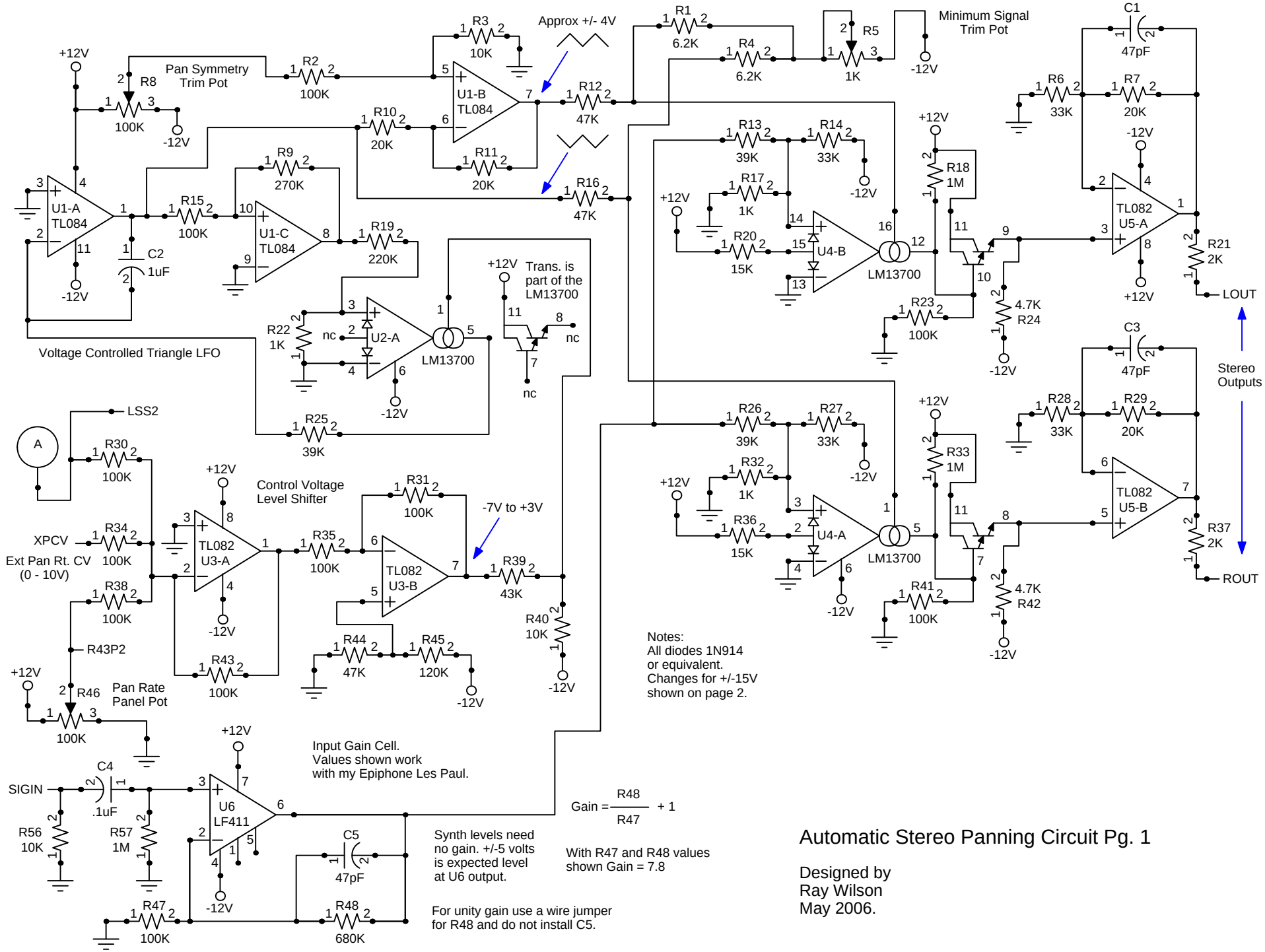
Pan Symmetry Trim Pot
R8
100K
R2
100K
R3
10K
U1-B
TL084
Approx +/- 4V
R12
47K
R1
6.2K
R4
6.2K
R5
1K
Minimum Signal Trim Pot
C1
47pF
R6
33K
R7
20K
R10
20K
R11
20K
R16
47K
U1-A
TL084
R15
100K
C2
1uF
R9
270K
U1-C
TL084
R19
220K
R13
39K
R14
33K
R17
1K
R20
15K
U4-B
LM13700
R18
1M
R23
100K
R24
4.7K
TL082
U5-A
R21
2K
LOUT
Voltage Controlled Triangle LFO
R22
1K
U2-A
LM13700
Trans. is part of the LM13700
C3
47pF
R28
33K
R29
20K
Stereo Outputs
LSS2
R30
100K
R25
39K
R26
39K
R27
33K
R32
1K
R36
15K
U4-A
LM13700
R33
1M
R41
100K
R42
4.7K
TL082
U5-B
R37
2K
ROUT
XPCV
Ext Pan Rt. CV
(0 - 10V)
R34
100K
R38
100K
TL082
U3-A
Control Voltage Level Shifter
R31
100K
R35
100K
TL082
U3-B
-7V to +3V
R39
43K
R40
10K
R44
47K
R45
120K
R43
100K
R43P2
R46
Pan Rate Panel Pot
100K
Notes:
All diodes 1N914
or equivalent.
Changes for +/-15V
shown on page 2.
Input Gain Cell.
Values shown work
with my Epiphone Les Paul.
SIGIN
C4
.1uF
R56
10K
R57
1M
U6
LF411
C5
47pF
R47
100K
R48
680K
Synth levels need
no gain. +/-5 volts
is expected level
at U6 output.
For unity gain use a wire jumper
for R48 and do not install C5.
Gain = R48 / R47 + 1
With R47 and R48 values
shown Gain = 7.8
Automatic Stereo Panning Circuit Pg. 1
Designed by
Ray Wilson
May 2006.