Sound Lab ULTIMATE Expander Audio And Voltage Mixing And Buffering (Pg. 1)
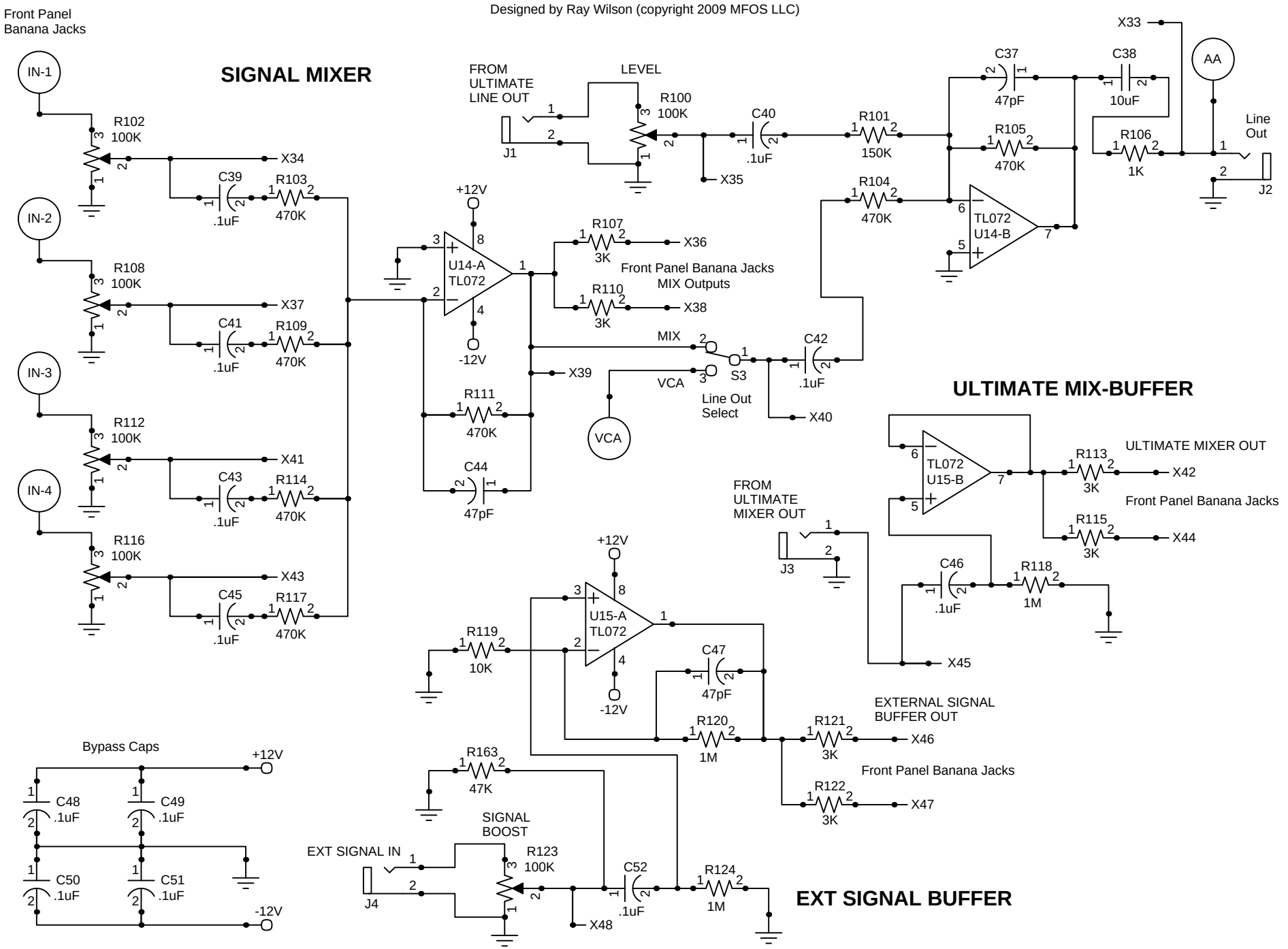
Designed by Ray Wilson (copyright 2009 MFOS LLC)