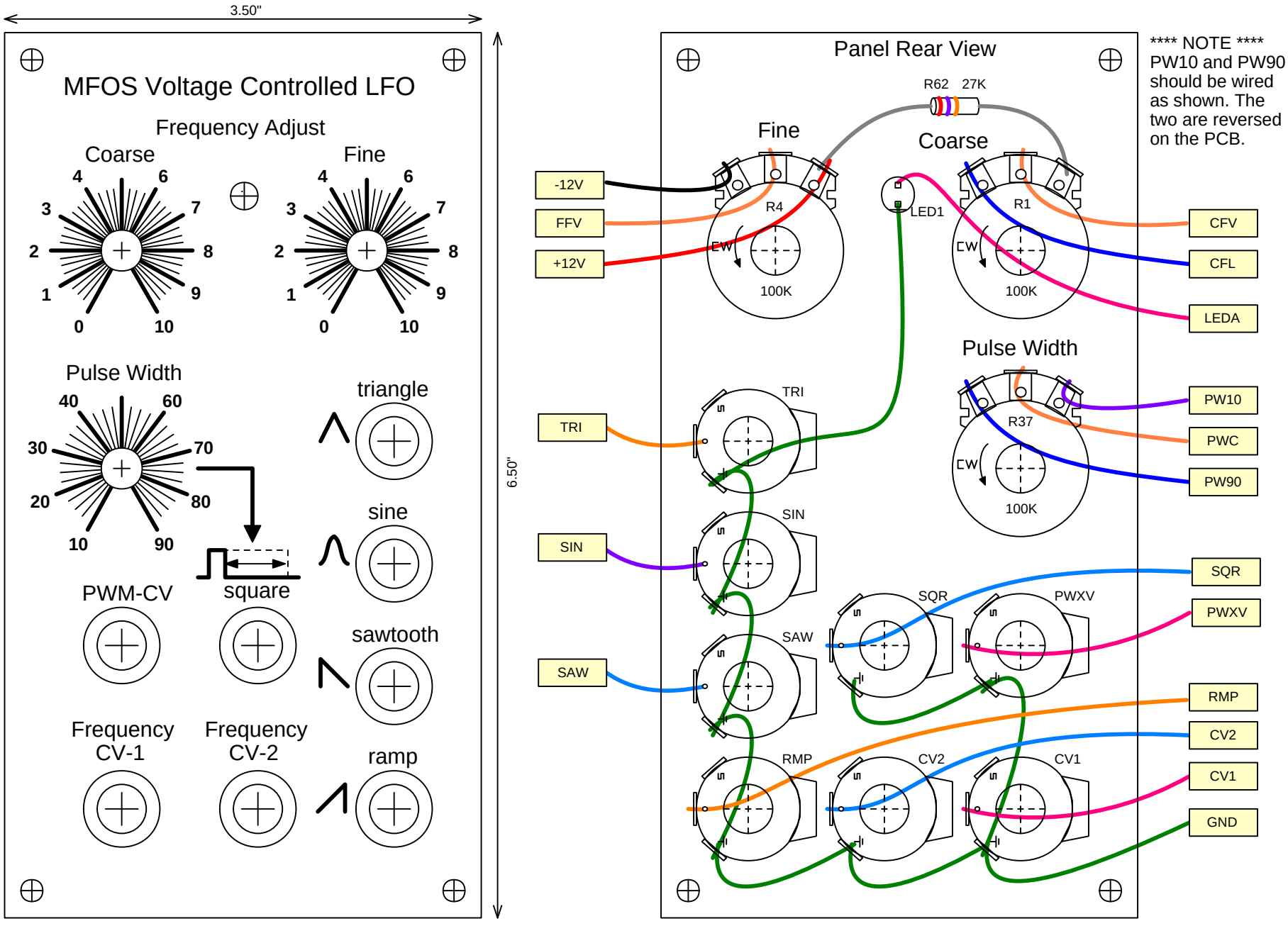MFOS Voltage Controlled LFO Suggested Panel Layout and Wiring Diagram