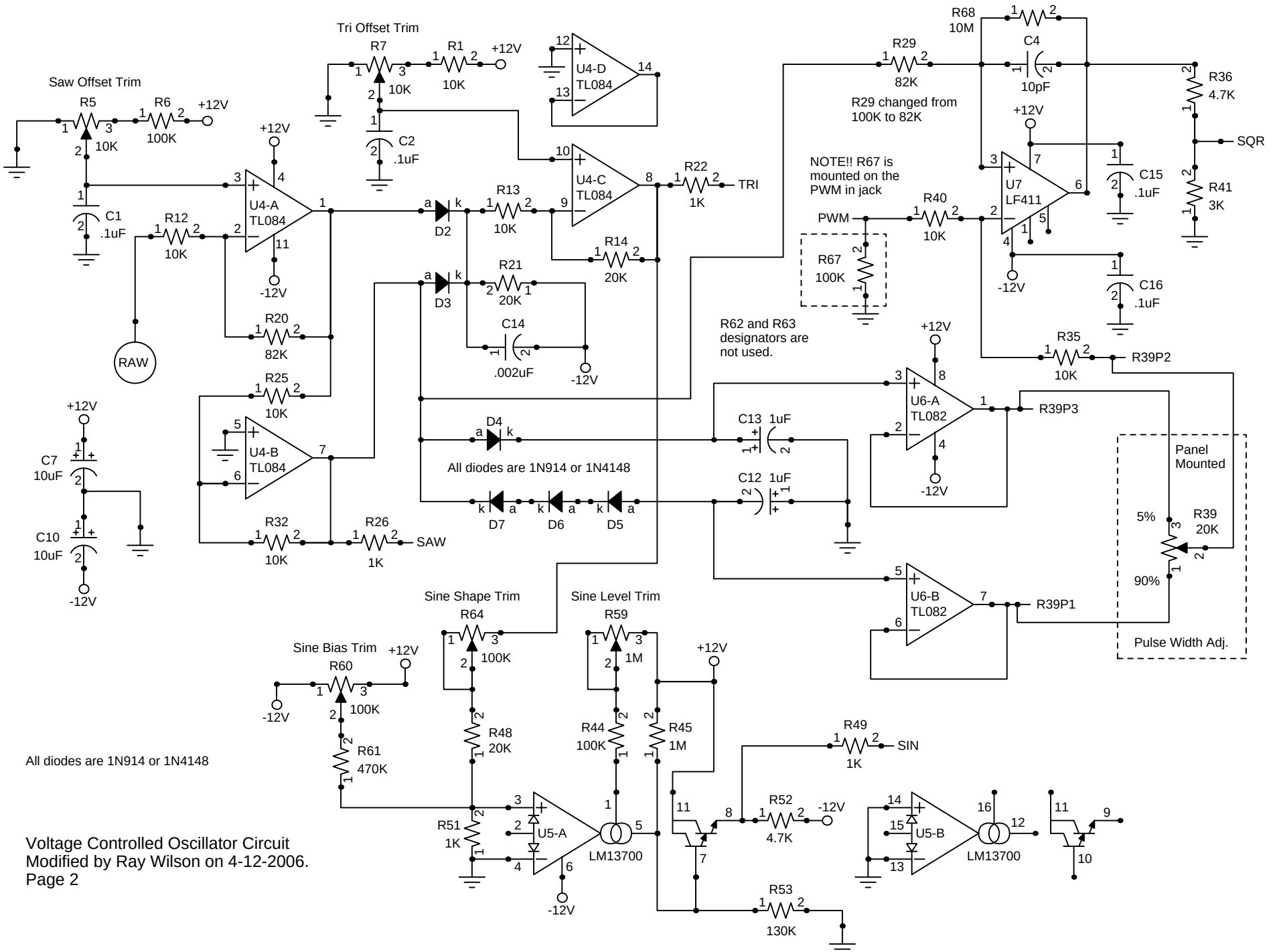

Voltage Controlled Oscillator Circuit
Modified by Ray Wilson on 4-12-2006.
Page 2