MFOS Envelope Follower Controlled Filter (Auto-Wah)

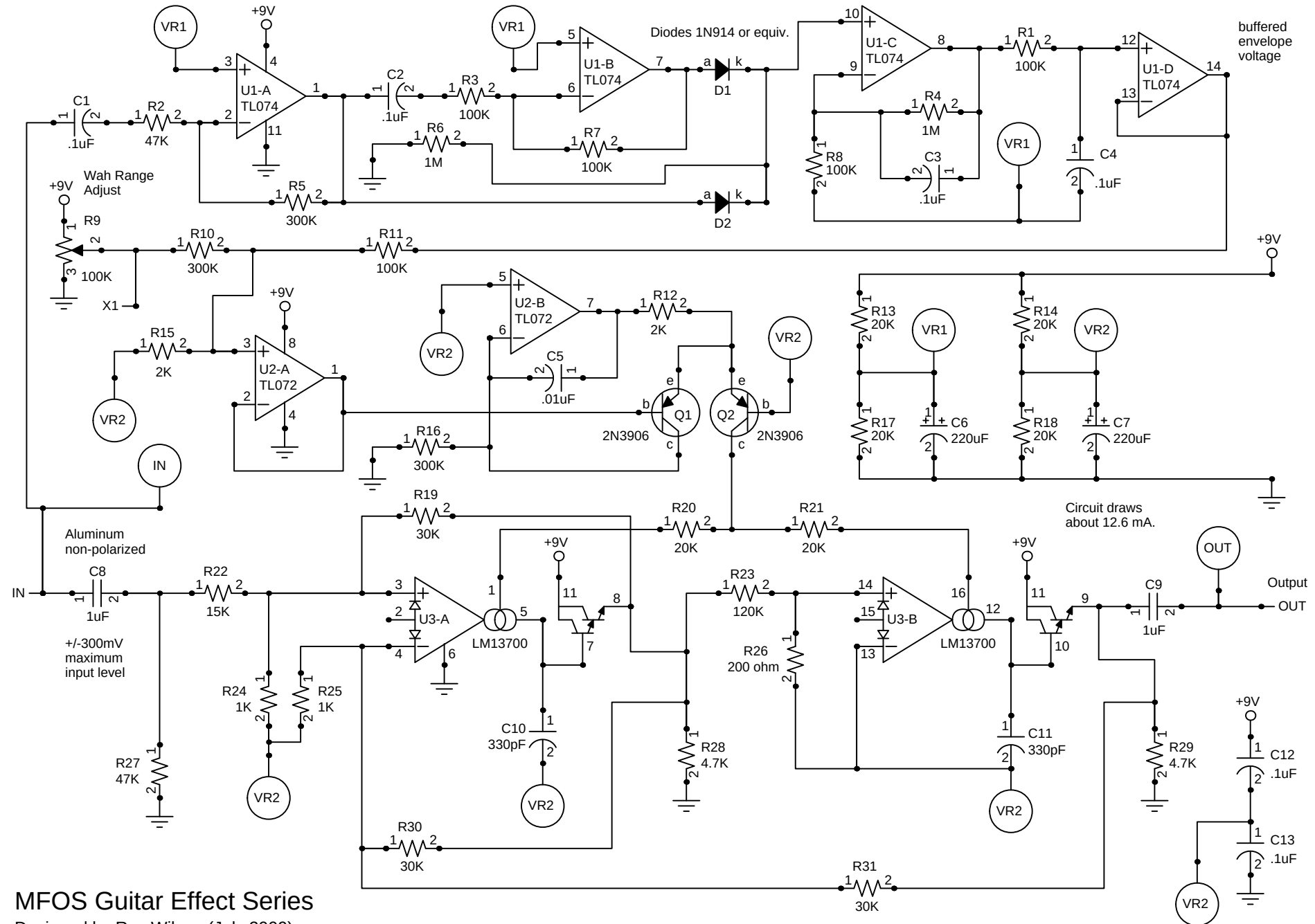

MFOS Guitar Effect Series

Designed by Ray Wilson (July 2009)

Copyright 2009 Music From Outer Space LLC