MFOS Sound Lab ULTIMATE LFO2

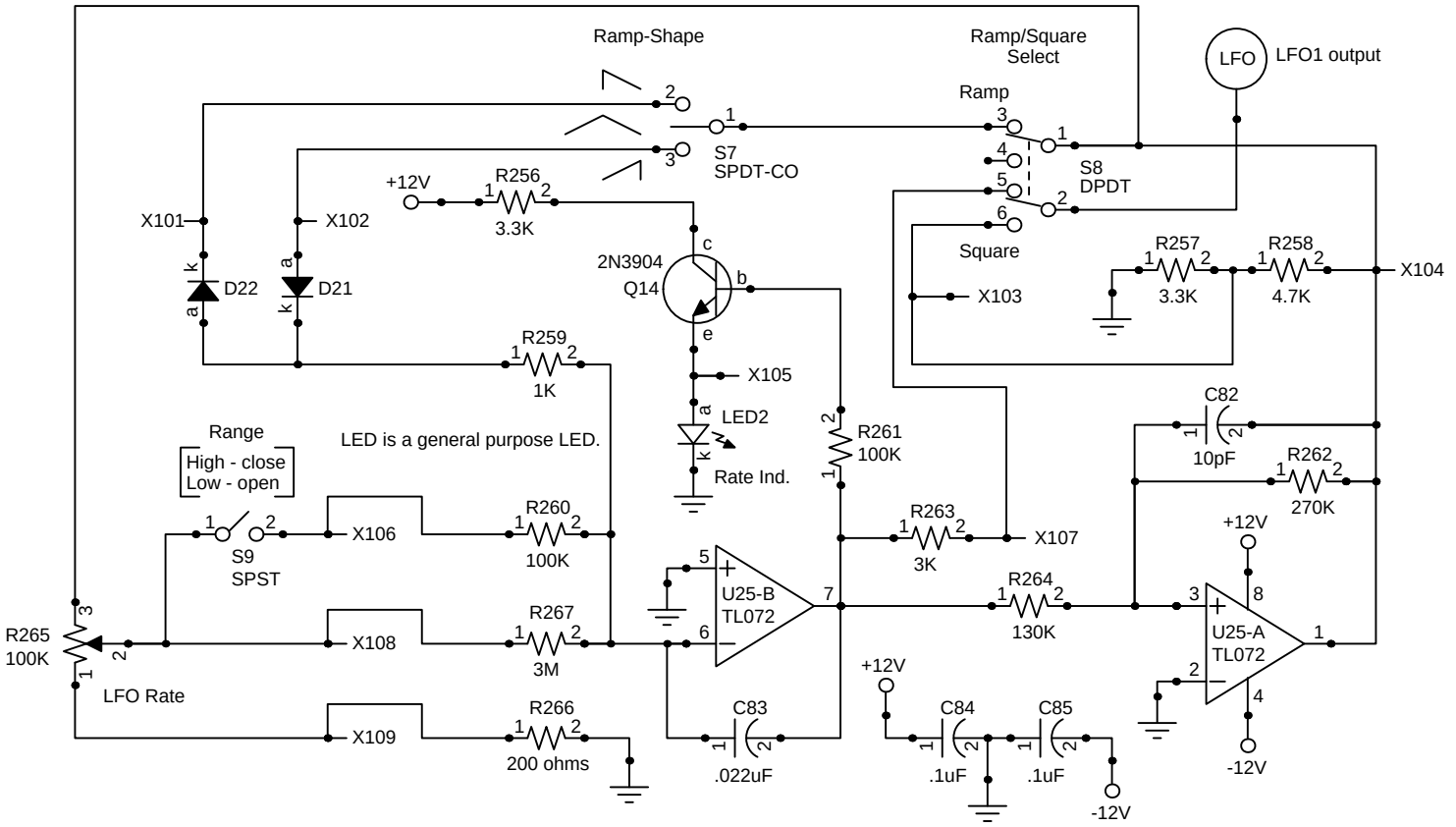

Attenuators

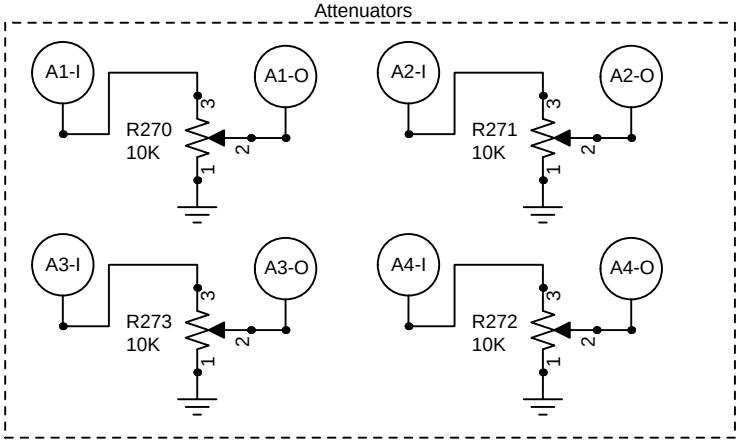

Power supply bypass caps

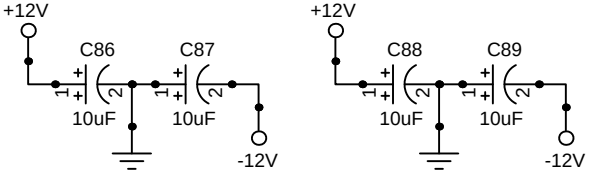

Copyright Ray Wilson 2008