MFOS Sound Lab MAXI Synth Repeat Gate Generator

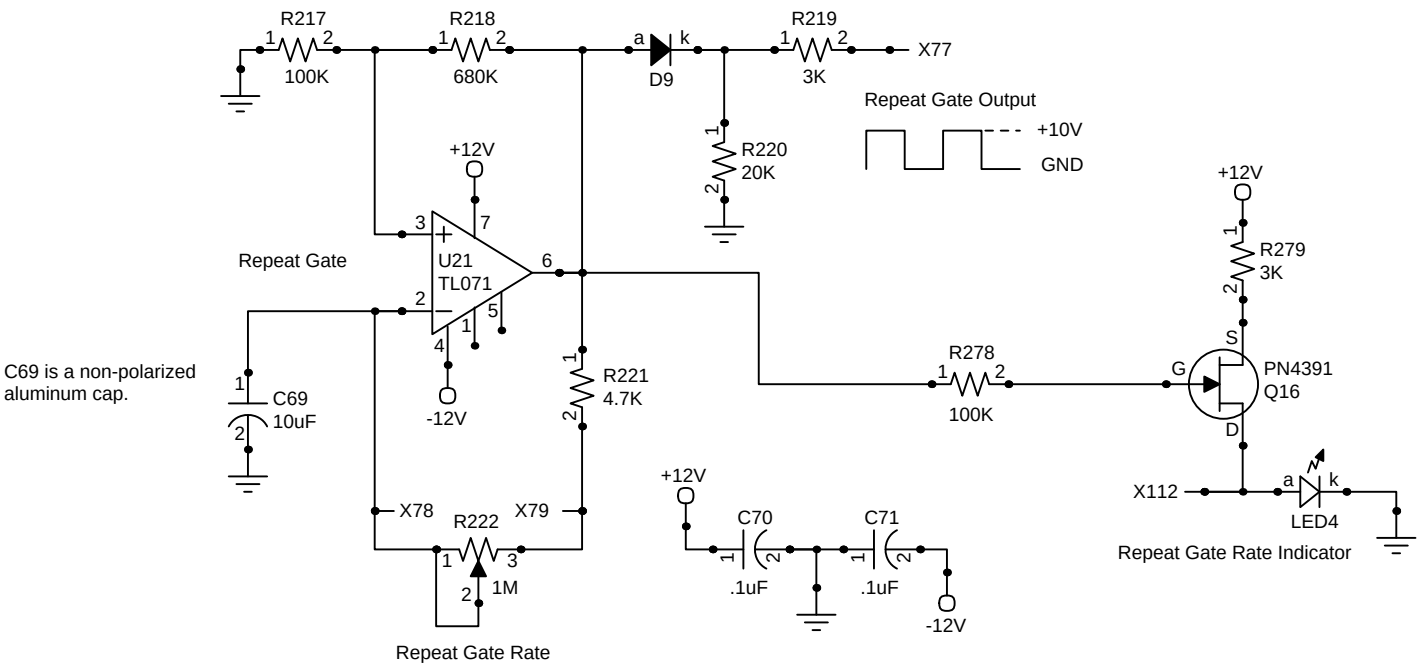

Copyright Ray Wilson 2009