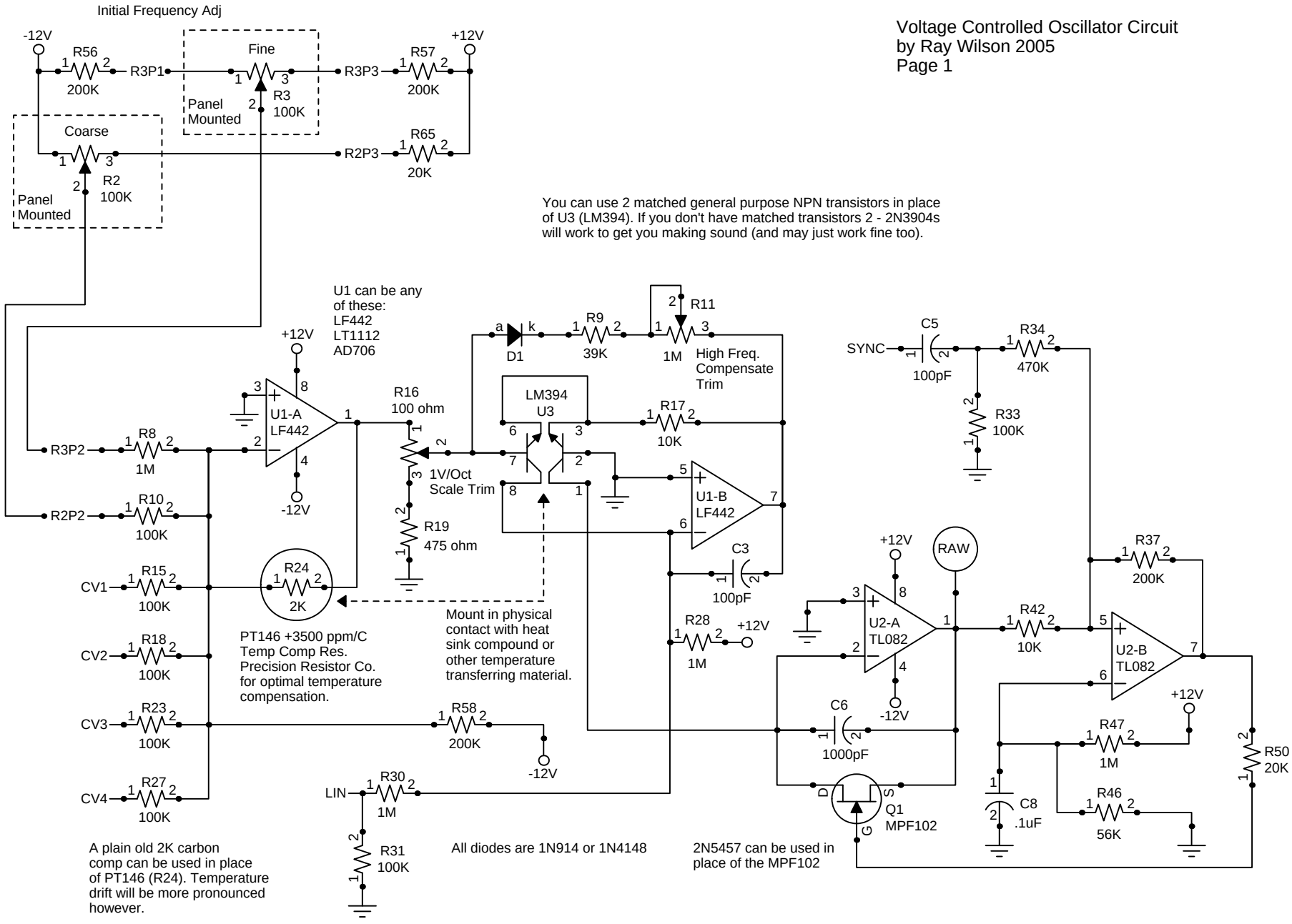Voltage Controlled Oscillator Circuit
by Ray Wilson 2005
Page 1